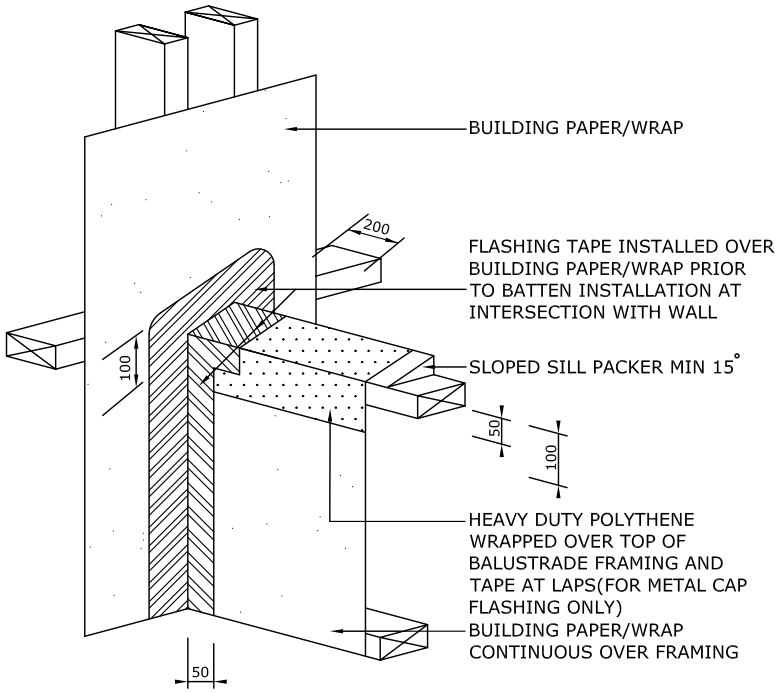

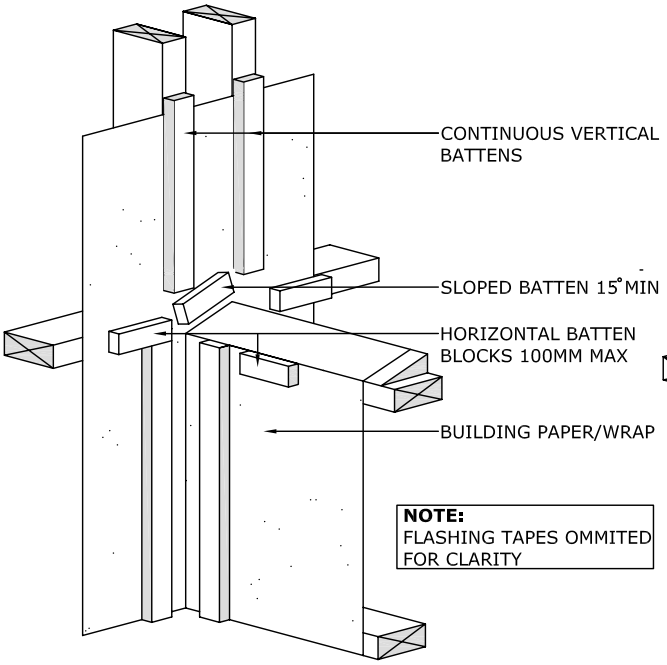

NOTE:
FLASHING TAPES OMMITED FOR CLARITY

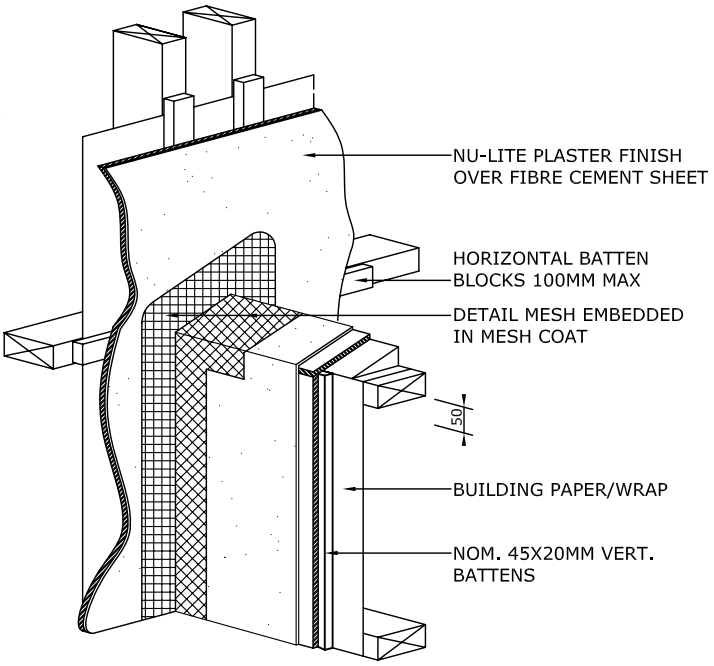

NOTE:
MESH SHEET EXCLUDED FROM DIAGRAM OVER MAJORITY PLANE SURFACES FOR CLARITY OF DRAWING.