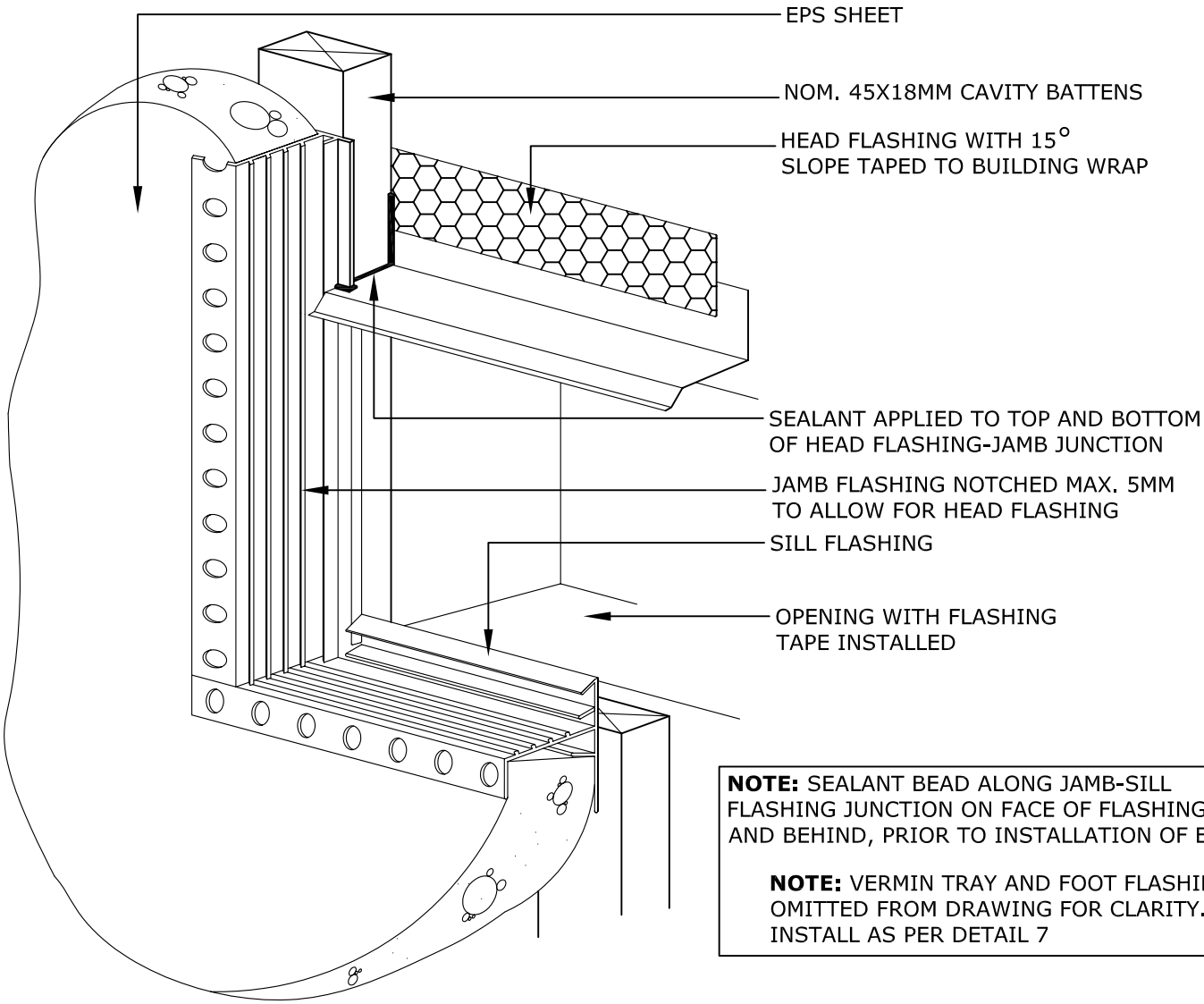

NOTE: SEALANT BEAD ALONG JAMB-SILL FLASHING JUNCTION ON FACE OF FLASHING AND BEHIND, PRIOR TO INSTALLATION OF EPS

NOTE: VERMIN TRAY AND FOOT FLASHING OMITTED FROM DRAWING FOR CLARITY. INSTALL AS PER DETAIL 7